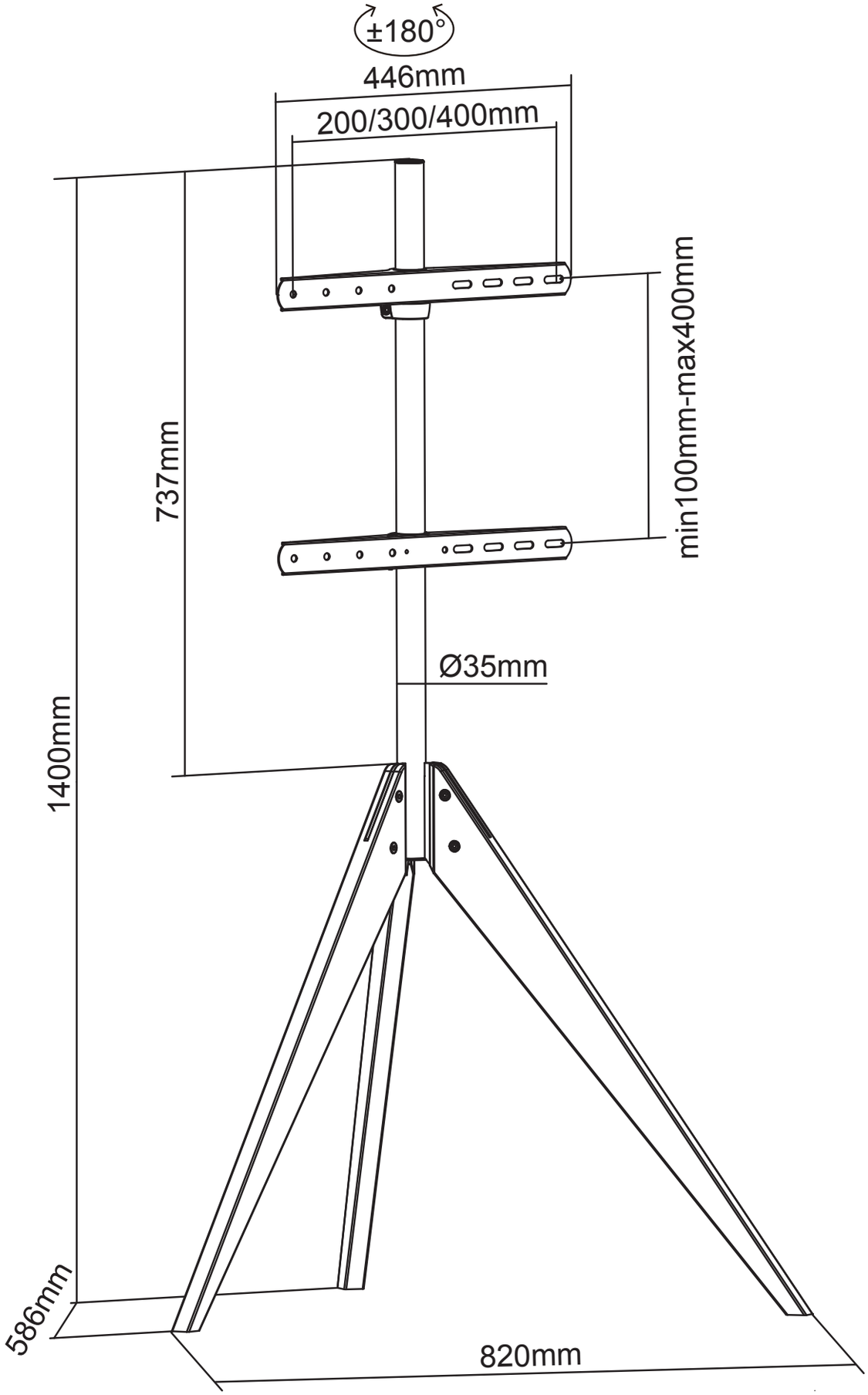
±180°
446mm
200/300/400mm
min100mm-max400mm
737mm
Ø35mm
1400mm
586mm
820mm